KP-H InGaAs Photodiode

KPDEH16L-CC1D

An InGaAs photodiode with 35GHz bandwidth. The incidence of the laser light is improved by integrating the photodiode with a condensing lens and ensuring an optical alignment tolerance of +/-30um.This CoC product is easy to use, because it is mounted on a high-frequency carrier that is custom designed for the photodiode.

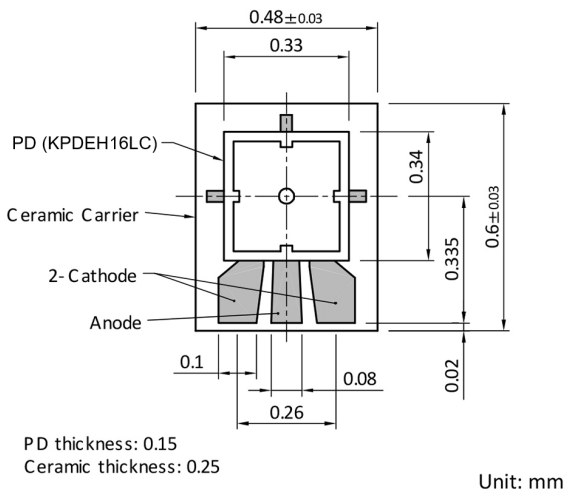

Characteristics

- **Supports 35GHz bandwidth (when used with commerically available transimpedance amplifer)**
- **Achieving 40μm light receiving diameter by using integrated condensing lens**
- **Equipped with a dedicated high frequency carrier to improve mountability**

Applications

- **400GbE（PAM4）／100GbE**
- **400Gbps／200Gbps／100Gbps Digital coherent system**

Package

- **CoC**

© KYOTO SEMICONDUCTOR Co., Ltd.

Absolute Maximum Ratings

Parameter	Symbol	Value	Unit	Conditions
Reverse voltage	V_R	5	V	-
Reverse Current	I_R	5	mA	-
Maximum optical power input	P_{imax}	5	mW	-
Forward current	I_F	5	mA	-
Operating temperature	T_{opr}	-40 to +85	°C	Avoid dew condensation
Storage temperature	T_{stg}	-40 to +85	°C	Avoid dew condensation

Electrical and Optical characteristics (Ta=25°C V_R=2V unless otherwise noted)

Parameter	Symbol	Min.	Typ.	Max.	Unit	Conditions
Active area	S	-	40	-	µm	-
Sensitive wavelength	λ	900	-	1700	nm	-
Bandwidth	BW	-	35	-	GHz	R_L=50Ω, λ =1550nm, P_{in}=0dBm, Small signal modulation with TIA
Responsivity	R	-	0.7 0.6	-	A/W	λ =1310nm λ =1550nm
Dark current	I_D	-	20	-	nA	V_R=2V

© KYOTO SEMICONDUCTOR Co., Ltd.

Frequency response with TIA

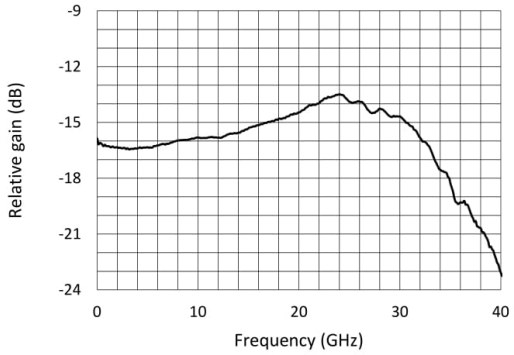

© KYOTO SEMICONDUCTOR Co., Ltd.

Notice and Disclaimer

Please note the following points regarding the technical information and product usage described in this document.

1. Information such as product specifications, characteristics, data, specification materials, and structures described in this document is subject to change. Before using our products, make sure to order the latest specifications and check the content. We disclaim warranty unless you use the latest specifications.
2. When considering applications involving heating, such as soldering, especially with eutectic solders, be sure to refer to the latest specifications and check the heat resistance standards.
3. We do not guarantee that your intended use will be satisfied or that our product will comply and operate with the equipment that you use.
4. While the information contained in this document has been carefully prepared for the sake of accuracy, we shall not be liable whatsoever even in the unlikely event that you or a third party suffers damage as a result of the information being incorrect, insufficient, incomplete, or misprinted.
5. Reprinting or reproduction of any part or this entire website without our permission is strictly prohibited.
6. The circuits and usage, etc. included in this document are for reference only. We do not guarantee that there will be no infringement of the intellectual property rights or other rights of the customer or a third party regarding these. We are not liable for any damage related to the infringement of the intellectual property rights or other rights of the customer or a third party.
7. The information contained in this document does not permit the customer to implement or use intellectual property rights or other rights owned or managed by us or a third party.
8. The products included in this document require an extremely high level of reliability, and they are not designed and manufactured for use with equipment or devices (medical equipment, transportation equipment, public transportation equipment, aerospace equipment, nuclear power control devices, fuel control, in-vehicle equipment (excluding car accessories not related to car control), various safety devices, etc.) (hereinafter, “specific application”) whose failure or malfunction may cause danger or damage to one s life or health or any other serious damage. We are not liable for any damage caused to you or a third party by using this product or this information for a specific application without obtaining the prior written consent of Kyoto Semiconductor. If you are considering using this product or this information for a specific purpose, please contact our sales office beforehand.
9. For our customers to export this product or the technology we provide, it is necessary to comply with the Foreign Exchange and Foreign Trade Act and the security export control laws and regulations of each country, and follow the procedures stipulated by the said laws and regulations. Do not use this product or this information for purposes such as developing weapons of mass destruction, military use, or other military purposes.
10. This product conforms to the RoHS Directive (2011/65/EU, (EU)2015/863).
11. If you have any inquiries regarding the details of the products described in this document, or if you have any other questions, please feel free to contact us.

Disclaimer for Sample Products

Kyoto Semiconductor, co. ltd. expressly disclaims any warranty for product samples; development prototypes (engineering samples), and mass production prototypes (pre-production samples). In no event shall Kyoto Semiconductor be liable, whether in contract or in tort, or otherwise, for any damages not only direct or common damages but also any incidental, special, indirect, consequential or punitive damages, including, but not limited to, damages for any loss of use, loss of time, inconvenience, commercial loss, or lost profits, savings or revenues to the fullest extent permitted by law or equity.
By ordering a product sample and subsequently using a product sample, you agree to the terms above.

© KYOTO SEMICONDUCTOR Co., Ltd.

KYOSEMI
A Dexerials Company

KYOTO SEMICONDUCTOR Co.,Ltd.

Western Japan Office Laxa Osaka, North Office 6F, 5-6-16 Fukushima, Fukushima-ku, Osaka-shi, Osaka 553-0003 Japan
TEL:+81-6-6690-8660 FAX:+81-6-6690-8666

Tokyo Office Mitsui Sumitomo Kaijo Tepco Building 9F, 1-6-1 Kyobashi, Chuo-ku, Tokyo 104-0031 Japan
TEL:+81-3-3528-6510 FAX:+81-3-3528-6530

Kyosemi Opto America Corp. 440 N. Wolfe Rd. #158, Sunnyvale, CA 94085, USA
TEL：+1 669-292-3949

© KYOTO SEMICONDUCTOR Co., Ltd.